Dimensions Need to Build Wooden Marble Divider

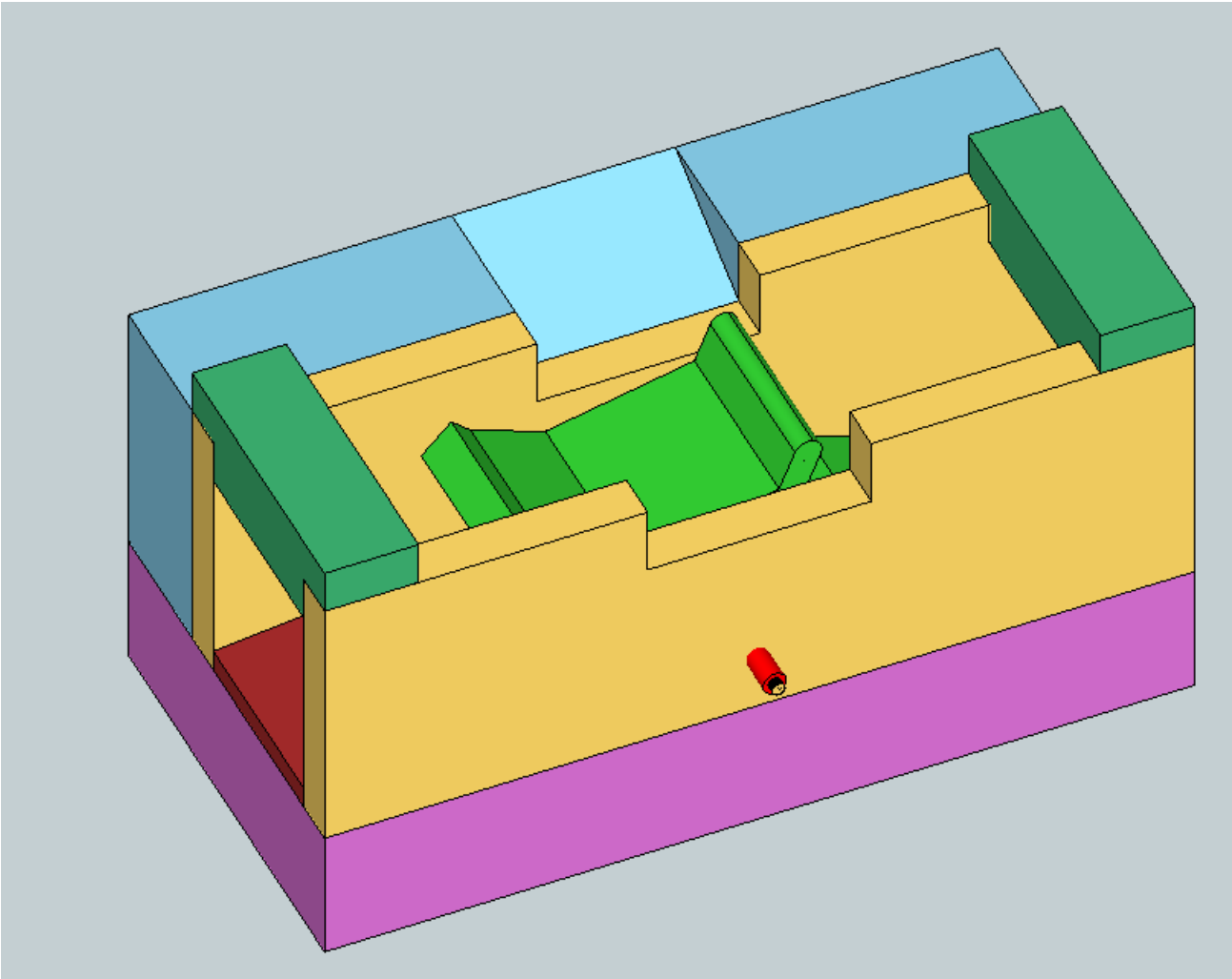

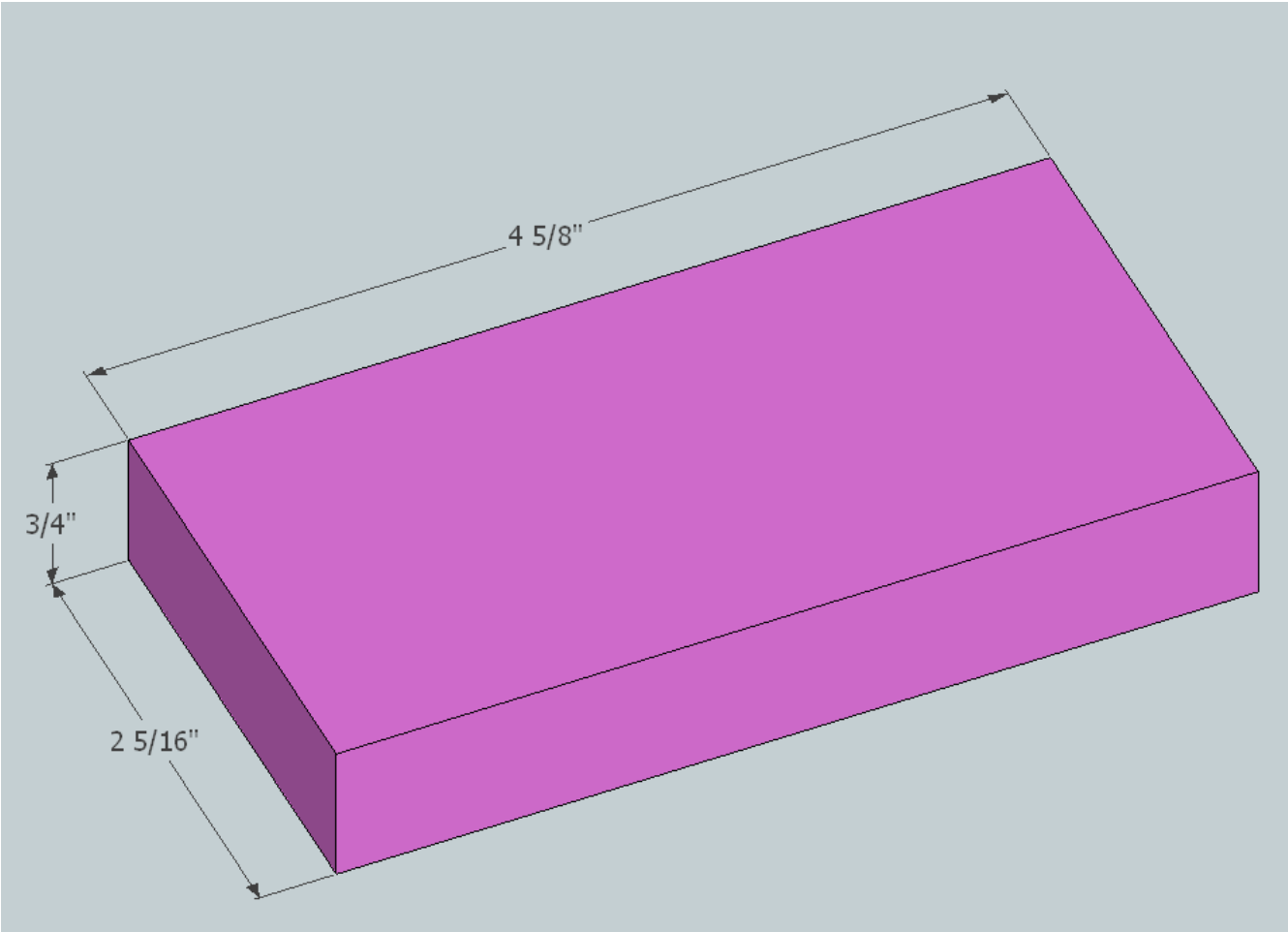
4 5/8"
3/4"
2 5/16"

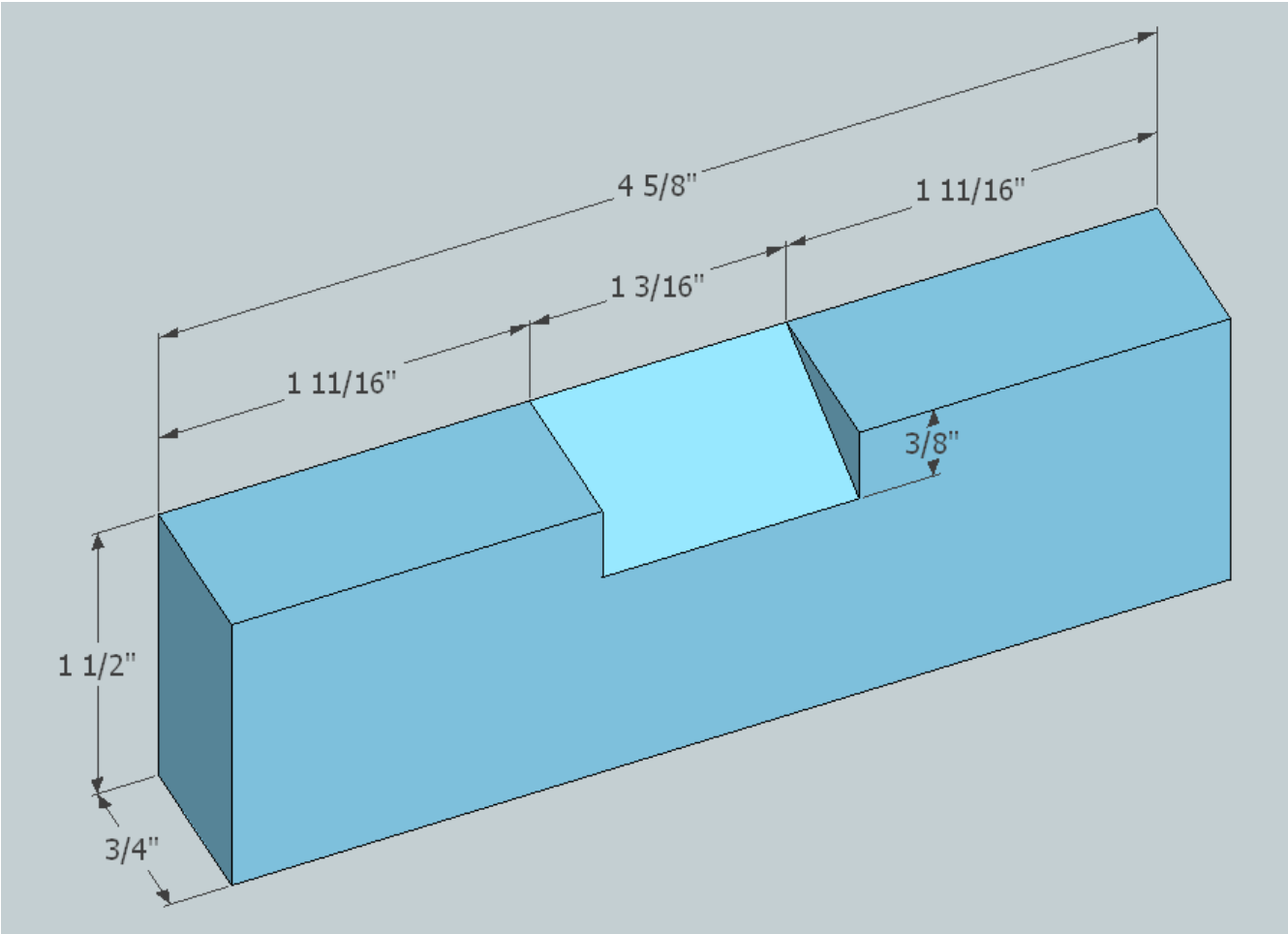
4 5/8"
1 11/16"
1 3/16"
1 11/16"
3/8"
1 1/2"
3/4"

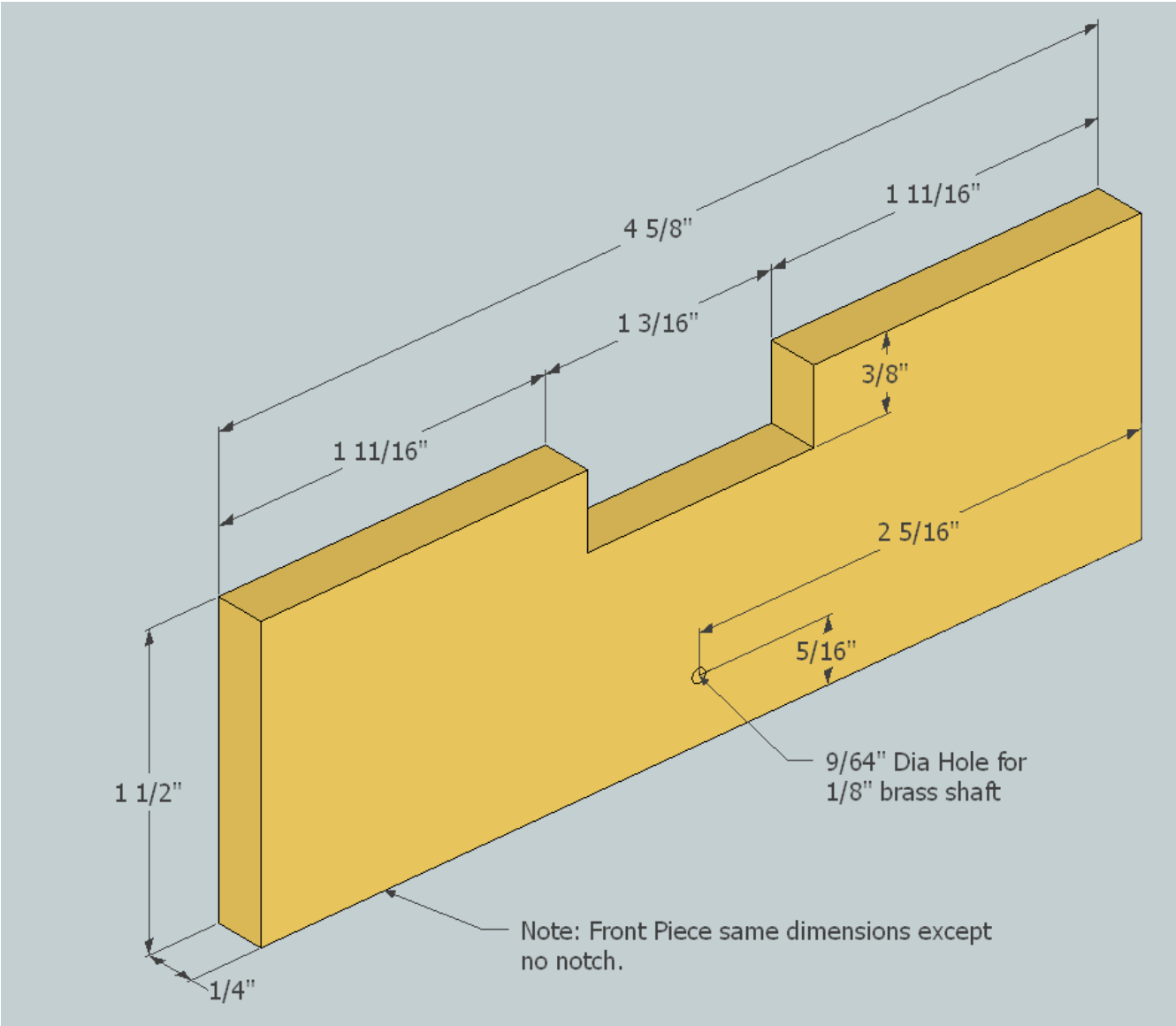
4 5/8"
1 11/16"
1 3/16"
3/8"
1 11/16"
2 5/16"
5/16"
9/64" Dia Hole for
1/8" brass shaft
1 1/2"
Note: Front Piece same dimensions except
no notch.
1/4"

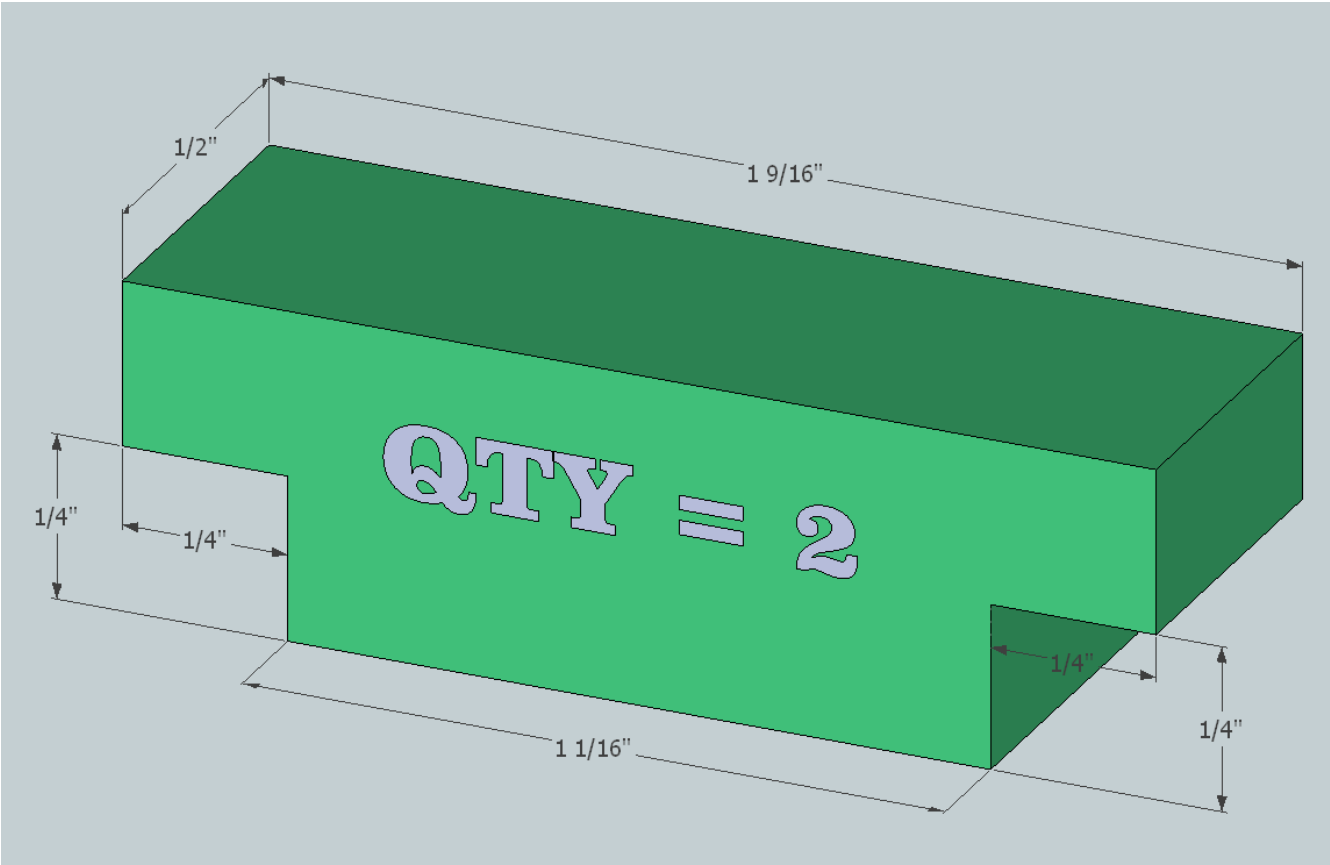
1/2"
1 9/16"
QTY = 2
1/4"
1/4"
1/4"
1/4"
1 1/16"

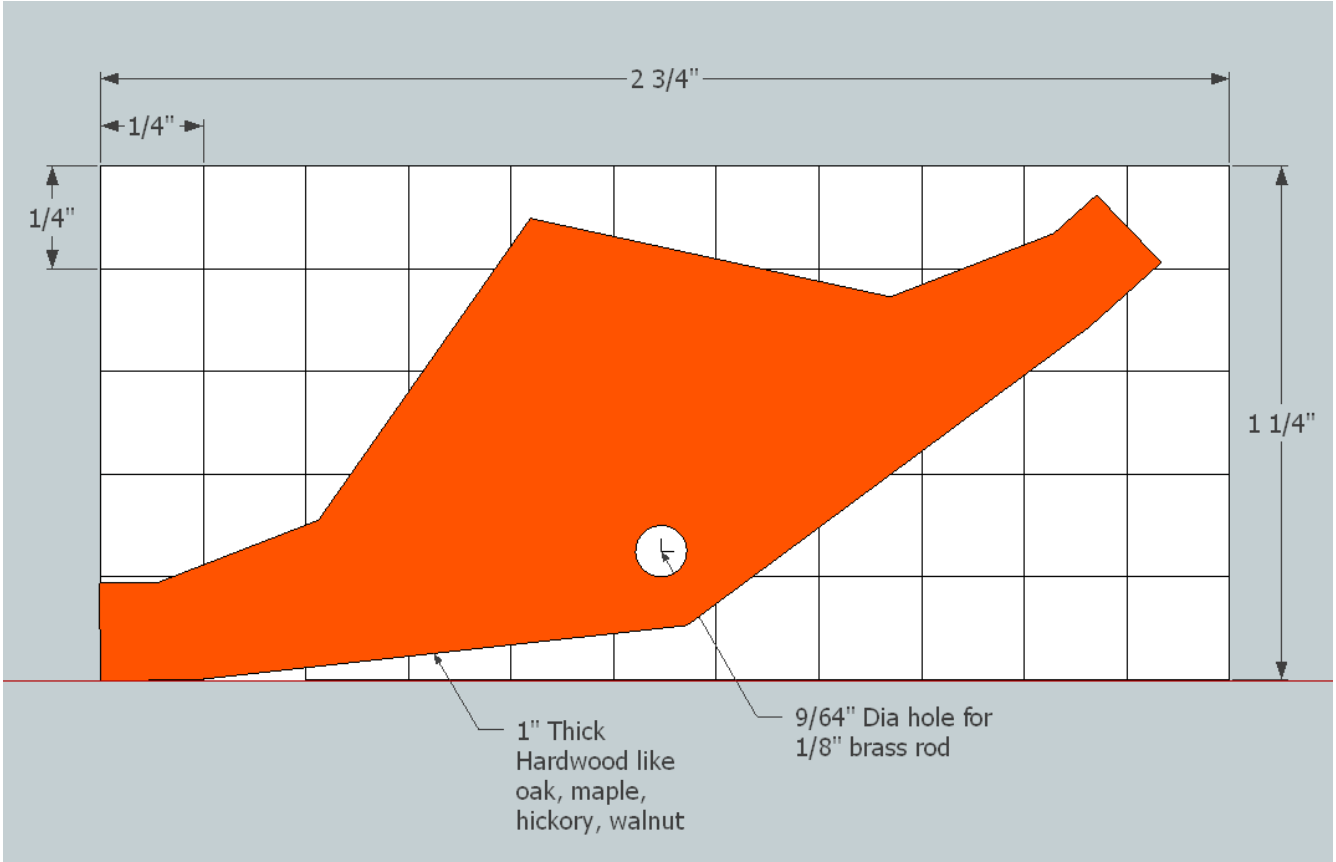
2 3/4"
1/4"
1/4"
1 1/4"
1" Thick
Hardwood like
oak, maple,
hickory, walnut
9/64" Dia hole for
1/8" brass rod

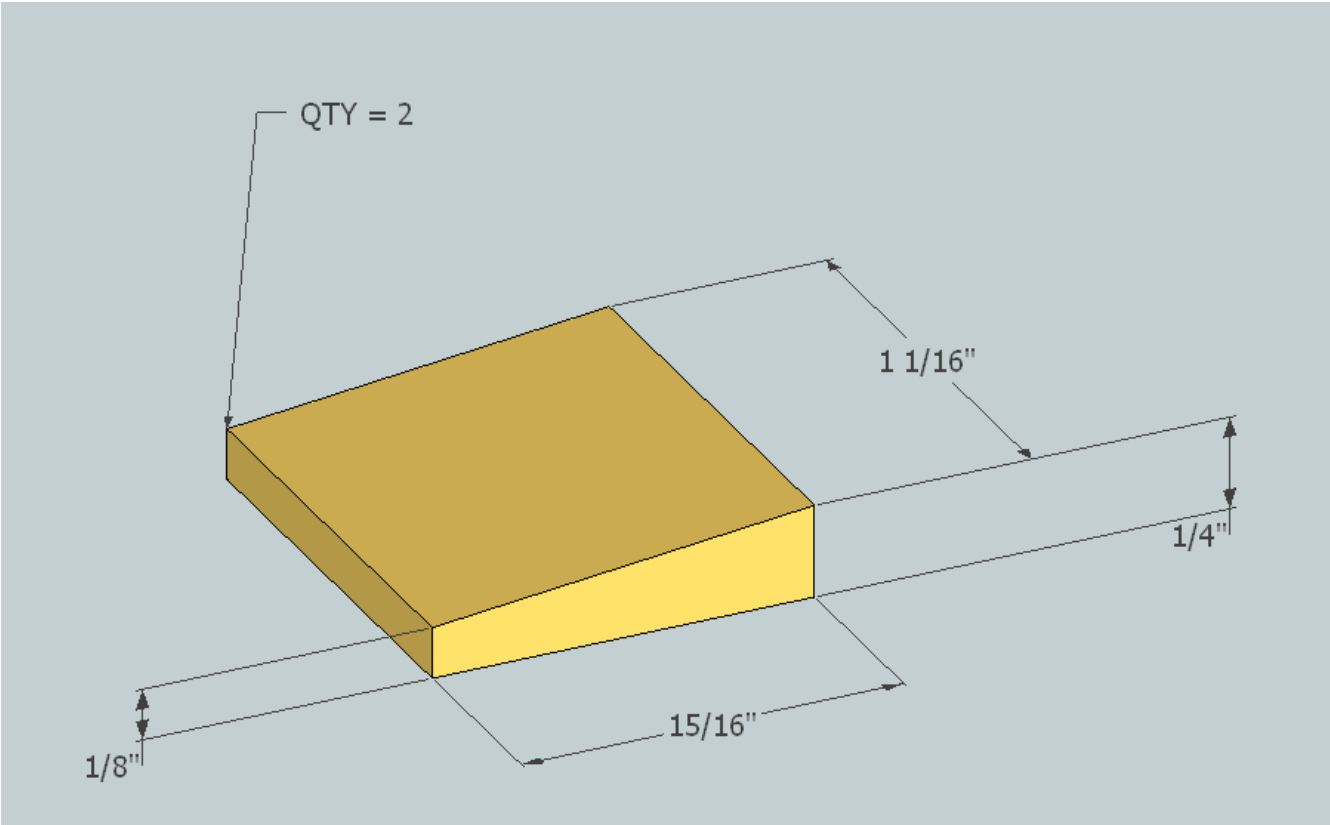
QTY = 2
1 1/16"
1/4"
15/16"
1/8"
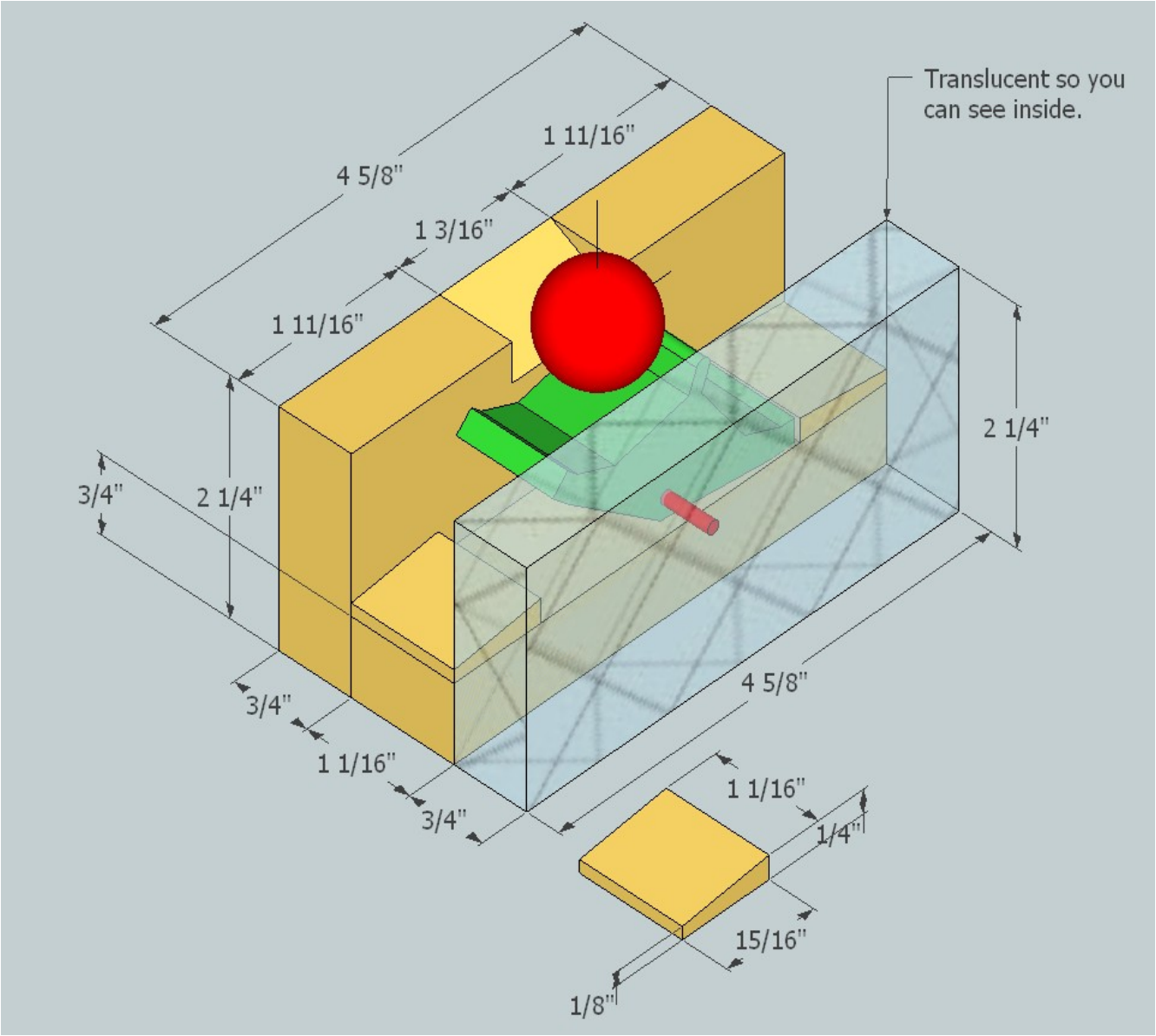
Optional Design Using Standard Thickness Stock Wood (¾” Thick)